TCP

Thermal Circuit Breaker

CLIPLINE

Data Sheet
100212_04_en

Description

The thermal circuit breaker can be switched back on again, has a compact design and is available in nine finely graded steps for nominal currents from 0.25 A to 10 A. The integrated ON/OFF switching function makes it possible to switch the circuit breaker back on immediately after triggering thus increasing the availability of the system.

The thermal circuit breaker **TCP** can be plugged into UK 6-FSI/C fuse base terminal blocks with screw connection technology and into ST 4-FSI/C terminals with spring-cage connection technology. For both types of terminal blocks, the potential distribution can be conveniently implemented using bridges.

Make sure you always use the latest documentation.
It can be downloaded at www.download.phoenixcontact.com.

A conversion table is available on the Internet at
www.download.phoenixcontact.com/general/7000_en_00.pdf.

This data sheet is valid for all products listed on the following page:

Ordering Data

Thermal Circuit Breaker

Description	Type	Order No.	Pcs./Pck.
Thermal miniature circuit breaker, can be plugged onto UK 6-FSI/C... or ST 4-FSI/C... base terminal block			
Nominal current 0.25 A	TCP 0,25A	0712123	20
Nominal current 0.5 A	TCP 0,5A	0712152	20
Nominal current 1 A	TCP 1A	0712194	20
Nominal current 2 A	TCP 2A	0712217	20
Nominal current 3 A	TCP 3A	0712233	20
Nominal current 4 A	TCP 4A	0712259	20
Nominal current 6 A	TCP 6A	0712275	20
Nominal current 8 A	TCP 8A	0712291	20
Nominal current 10 A	TCP 10A	0712314	20

Accessories

Description	Type	Order No.	Pcs./Pck.
Zack strip, 10-section, white	ZBF 5 (ordering data see CLIPLINE catalog)		

Technical Data

Technical Data in Accordance With IEC/DIN VDE	
Nominal voltage	250 V AC / 65 V DC
Nominal current	0.25 A ... 10 A
Ambient temperature	-20°C ... +60°C

Interrupting Capacity I_{CN}	
For nominal currents of 0.25 A ... 4 A	6 x I_N
For nominal currents of 6 A ... 10 A	8 x I_N

Interrupting Capacity (UL 1077)	
AC 250 V	2000 A
DC 65 V	200 A

Service Life	
Cycles with 1 x I_N (inductive)	3000
Cycles with 2 x I_N (inductive)	500

General Data	
Rated surge voltage	2.5 kV
Contamination class	2
Surge voltage category	III
Insulating material group	I
Insulating material	PA
Inflammability class in accordance with UL 94	V0
Connection data	250 V AC / 65 V DC
Approvals	

Time/Current Characteristic Curve

Total interruption period for nominal current, ambient temperature 23°C

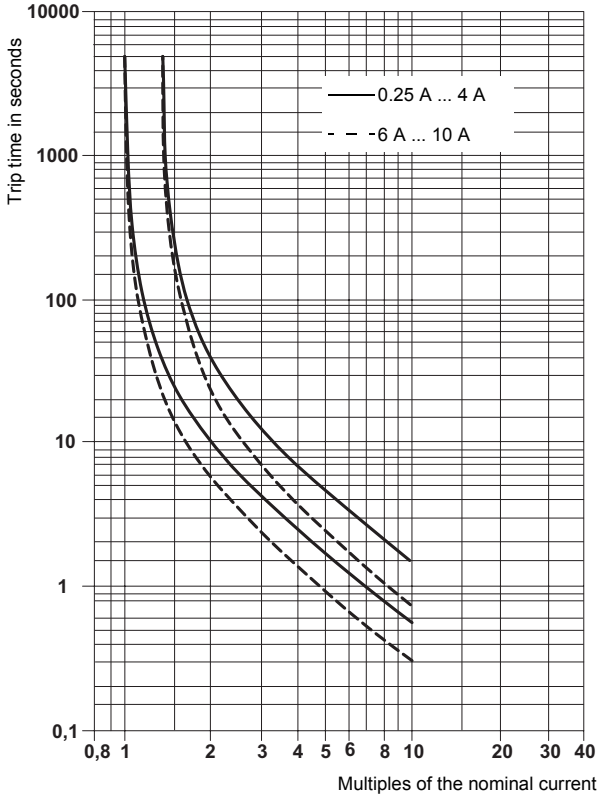

The time/current characteristic curve depends on the ambient temperatures. To avoid a premature or late switch-off, the nominal current of the circuit breaker must be multiplied with a temperature factor.

Ambient Temperature [°C]	-20	-10	0	23	40	50	60
Temperature Factor	0.76	0.84	0.92	1	1.08	0.16	1.24

When aligned in a row, the nominal current of the devices can either be transmitted at only 80% or must be overdimensioned accordingly.

Nominal Currents and Characteristic Internal Resistances

Nominal Current [A]	Internal Resistance [Ω]
0.25	14
0.5	3.4
1	0.9
2	0.25
3	0.11
4	0.07
6	≤ 0.05
8	≤ 0.05
10	≤ 0.05

Dimensional Drawing

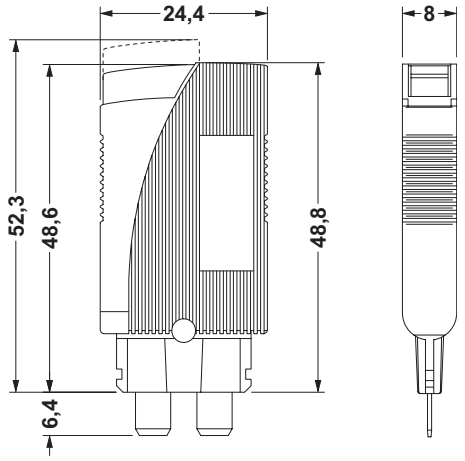

Circuit Diagram